Curved Casing Made to Order

arch-species

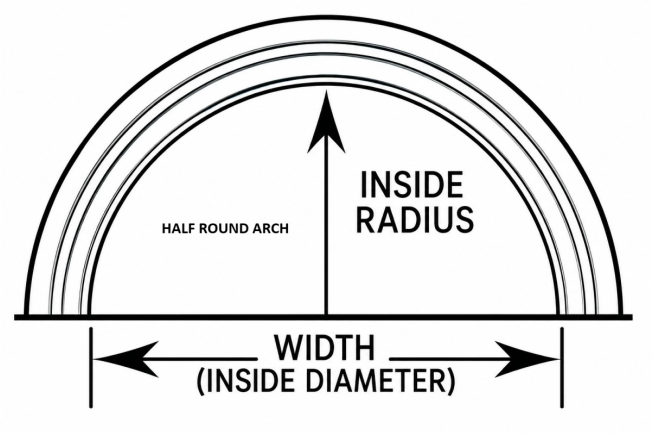

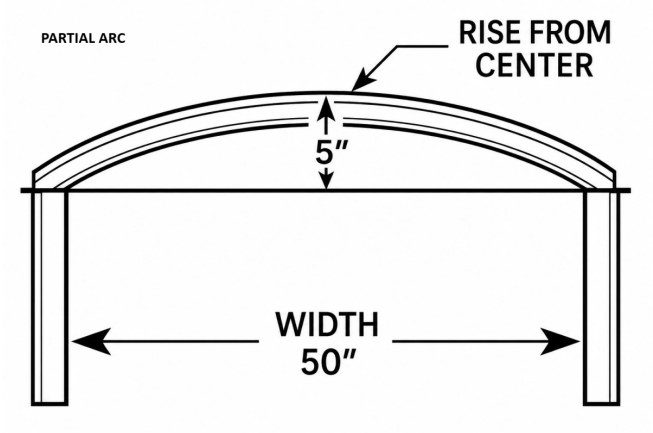

Product code	arch-species
Specifications	Poplar, Clear Pine, Primed MDF, White Oak, Red Oak
Category	Trim & Moulding
Type	Casing
Availability	Made-to-Order
Lead time	Approximately 2 weeks

The Royal Wood Shop offers custom curved mouldings, including casing and backband, to beautifully finish archways and arched doorways. Available in wood or MDF, our made-to-order curved trim accommodates three types of arches: half-round, partial arc and ellipse. All curved mouldings are custom manufactured with an approximately two-week lead time. A template and deposit are required to begin production. Contact us for your custom curved moulding needs throughout York Region, Toronto and the GTA.